DECTRIS
detecting the future

EIGER2 Data Interfaces

Andreas Förster
Application Scientist Crystallography

DECTRIS Ltd.
5405 Baden-Dättwil
Switzerland
www.dectris.com

Data interfaces

- *Data interfaces enable access to image series*
- *Multiple data interfaces are available*
  - *different requirements*
- *Multiple data interfaces can be active simultaneously*
  - *no more than 2 high performance interfaces active at any given time*

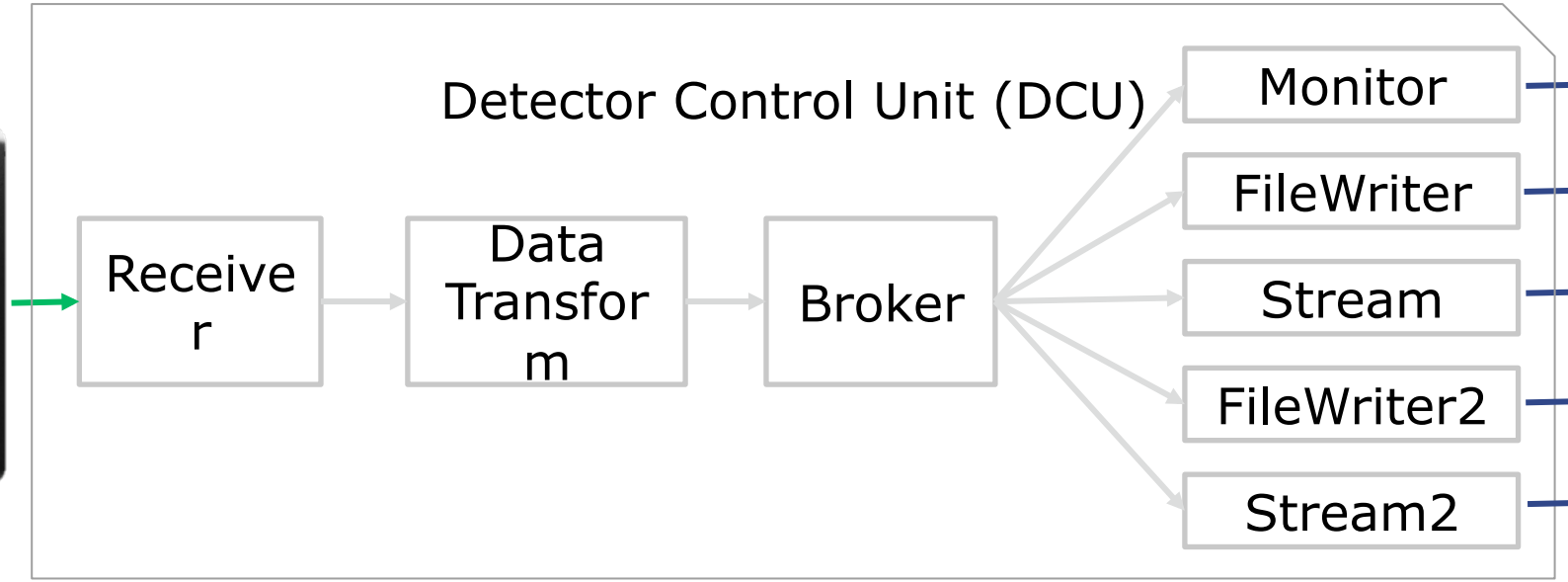

DECTRIS
detecting the future

Data interfaces – Hardware

Detector – DCU connection (E2 X 16M)

– 4 x LC/UPC duplex connectors (10 Gbps)

DCU – User Server

– 2 x 10 GbE SFP+

– 2 x 1 GbE Base-T

– 1 fixed IP for servicing

– 2 x 100 GbE QSFP28

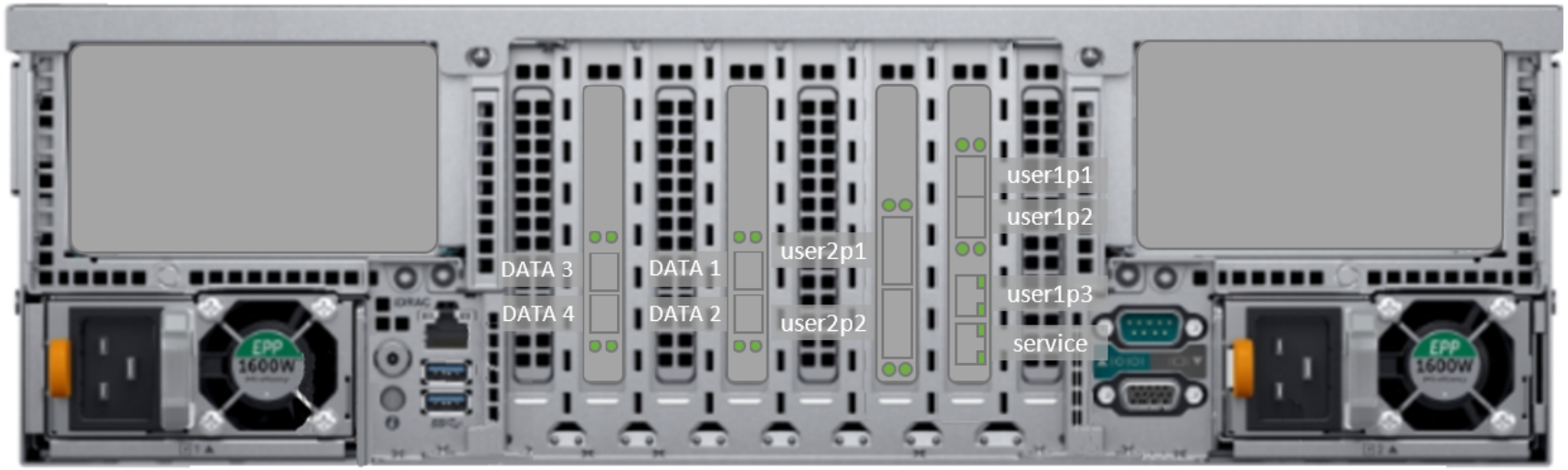

DECTRIS detecting the future

Design goals for the data interfaces

DECTRIS wants to provide data interfaces that enable:

1. Easy integration of EIGER2 into existing EIGER setups.
2. Progressive approaches.
3. Be consistent over all EIGER related products.
4. Stick and contribute to proven standards.
   - *Such as HDF5, 0MQ*

DECTRIS
detecting the future

Stream 2 – planned structure

- *ZeroMQ.*
- *Clients can define amount of metadata they receive.*
- *Compressed metadata.*
- *All thresholds will be sent to the same server to allow post-processing.*
- *CBOR as data format (superset of JSON).*
- *Supports multi-threshold data.*

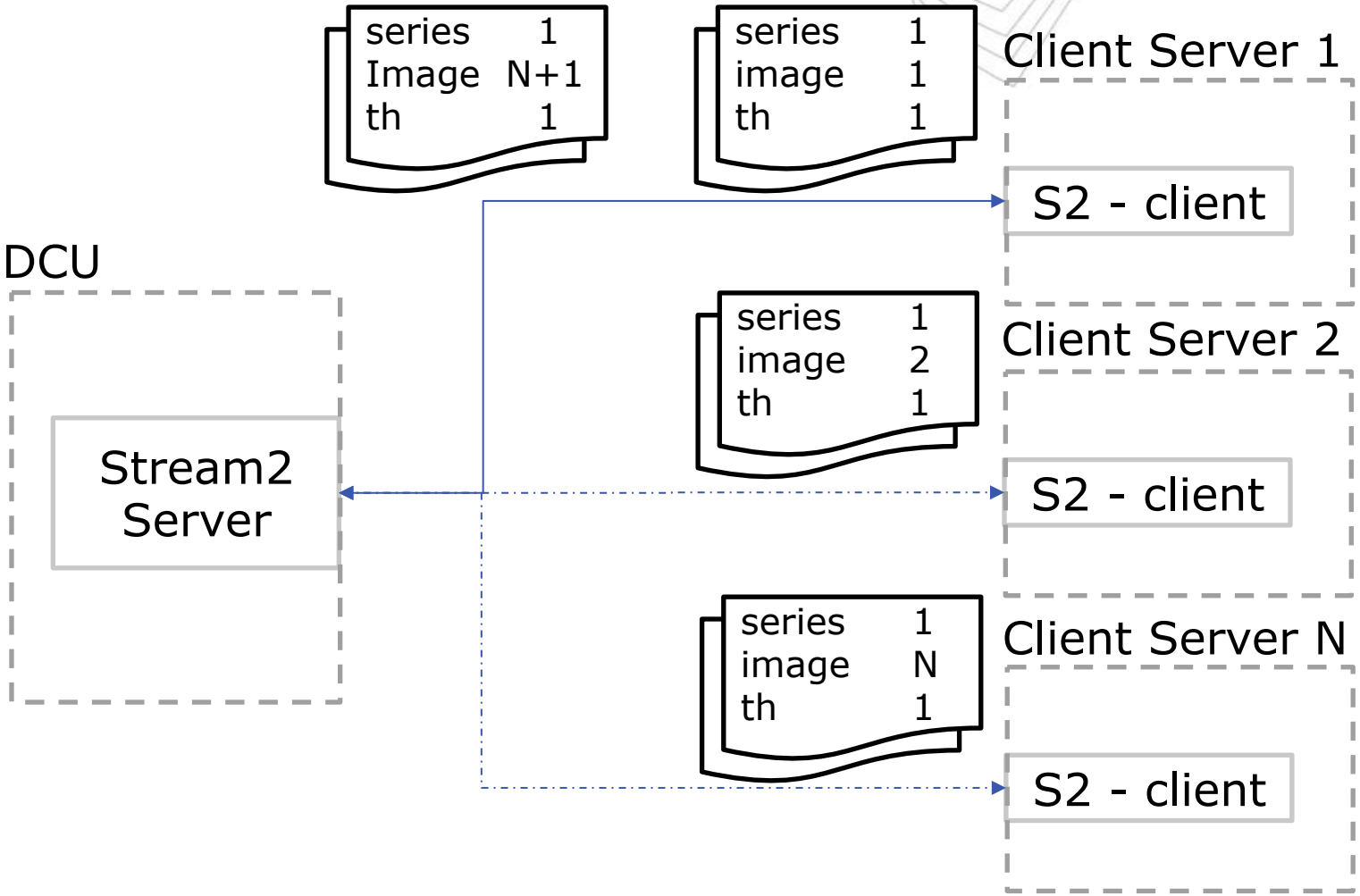

DECTRIS detecting the future

A new data format - CBOR

- *No multipart messages required.*
- Binary data stored inline.
- Removes dependency on 0mq.
  - Enables future options (e.g HTTP)
- Simplifies debugging / dumping.

- **Beta testers please contact me.**
- **Which languages do you prefer for our stream receiver examples?**


```
{'auto_summation': True,
 'beam_center_x': 1051.0,
 'beam_center_y': 501.0,
 'count_time': 1.0,
 'data_collection_date': datetime.datetime(2020, 6, 4, 13, 23, 57, 225000, tzinfo=datetime.timezone(datetime
 'description': 'Dectris EIGER2 Si 500K',
 'detector_distance': 119.0,
 'detector_number': '',
 'detector_readout_time': 1e-07,
 'detector_translation': [0.0, 0.0, -119.0],
 'element': 'Ga',
 'firmware_version': 'tsw1-stream2-20.6.4.46[illegible]eba[illegible]7be473[illegible]rty',
 'frame_count_time': 0.00667333333333332,
 'frame_period': 0.00667333333333332,
 'frame_time': 1.0000001,
 'goniometer': {'chi': {'increment': 1.1[illegible], 'start': [illegible]90.0},
                'kappa': {'increment': [illegible].5, 'start': 70.0},
                'omega': {'increment': 0.15, 'start': 23.0},
                'phi': {'increment': 2.14[illegible], 'start': -179.0},
                'two_theta': {'increment': 0.5, 'start': 119.0}},
 'image_data_type': 'uint32le',
 'image_filters': {'flatfield': {1: {'array': CBORTag(40, [[514, 1030], CBORTag(85, b'\x00\x00\x80?\x00\x00\
                                     'compression': 'none',
                                     'data_type': 'float32le'},
                                 2: {'array': CBORTag(40, [[514, 1030], CBORTag(85, b'\x00\x00\x80?\x00\x00\
                                     'compression': 'none',
                                     'data_type': 'float32le'}},
                   'virtual_pixel_correction_enabled': True},
 'image_size': [514, 1030],
```


Draft
This is bound to change!

DECTRIS detecting the future

Stream 2 – Future possibilities

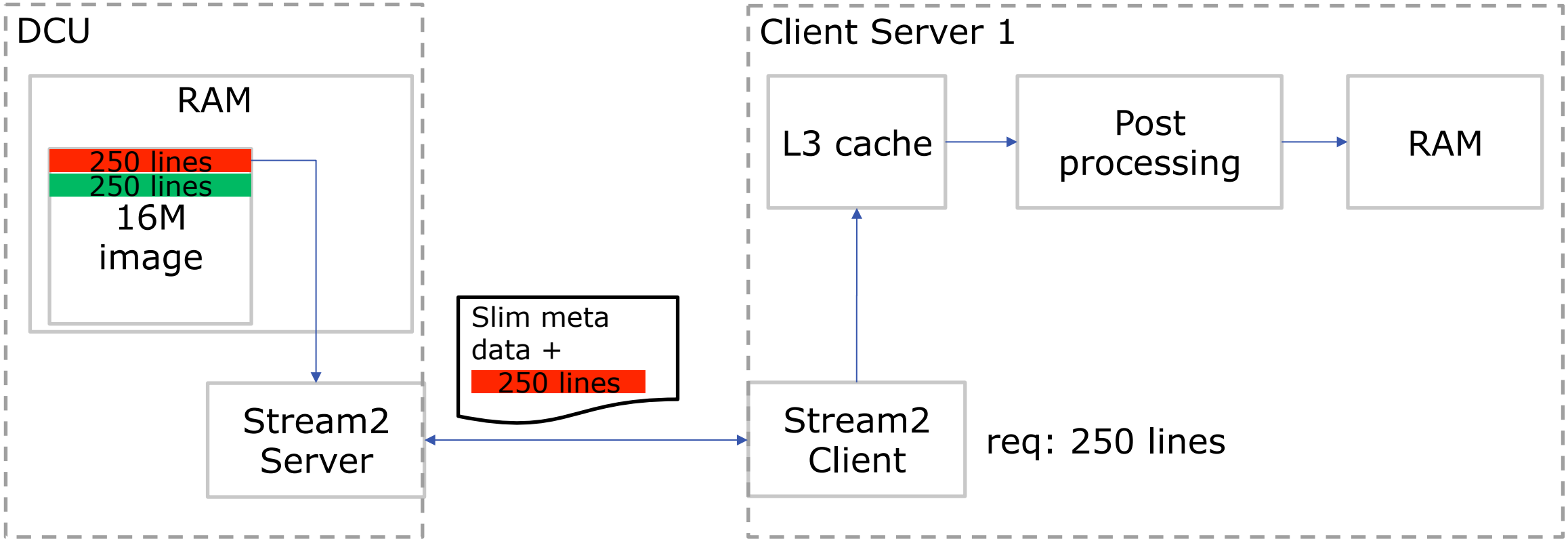

DECTRIS
detecting the future

FileWriter 2

- *Supports HDF5 gold standard.*
  - *Implementation as discussed.*
  - ***NeXus NXmx needs to be frozen and declared the Gold standard.***

- *Supports multi-threshold data.*

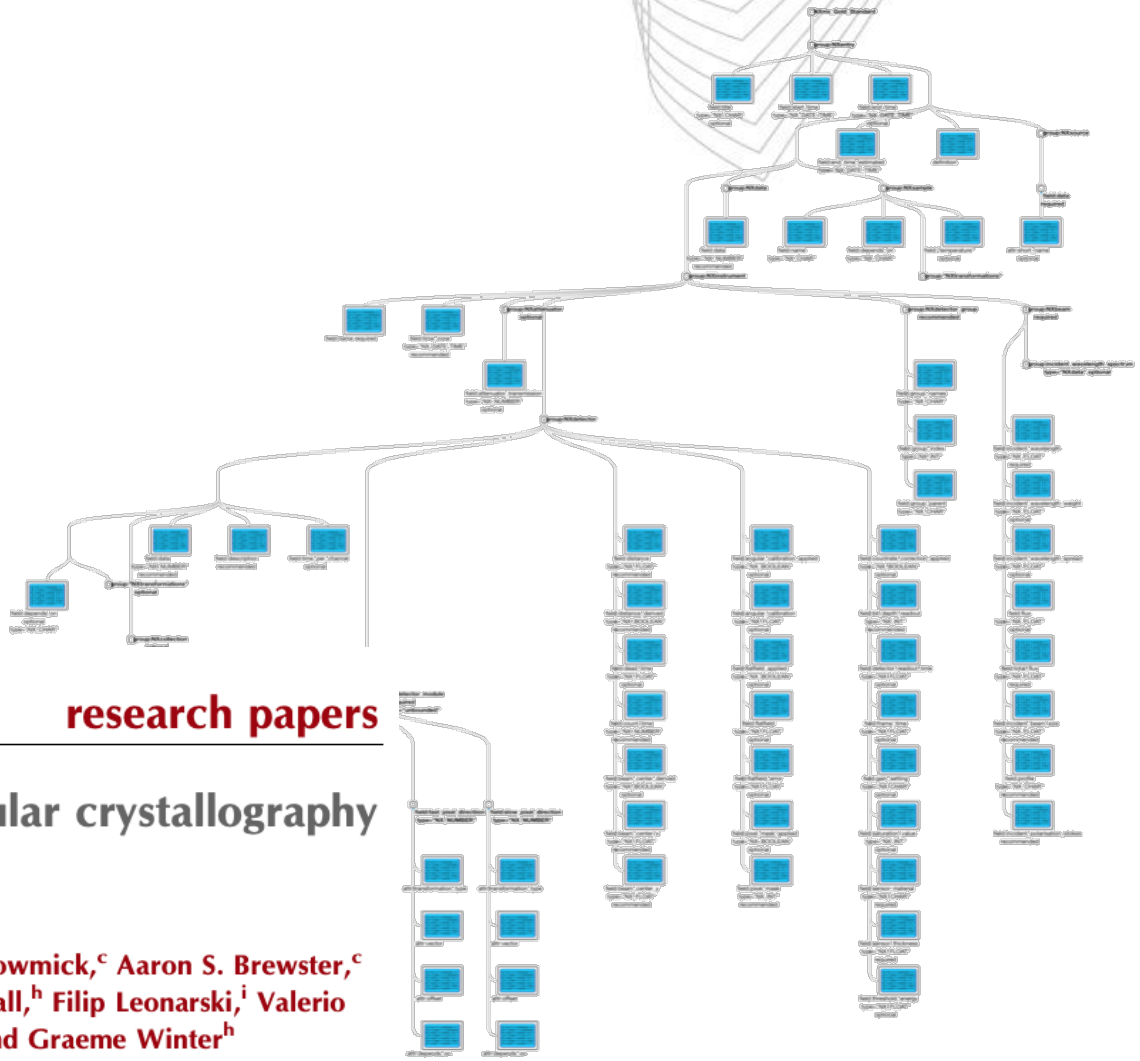

research papers

IUCrJ
ISSN 2052-2525
BIOLOGY | MEDICINE

Gold Standard for macromolecular crystallography diffraction data

Herbert J. Bernstein,[a*] Andreas Förster,[b] Asmit Bhowmick,[c] Aaron S. Brewster,[c] Sandor Brockhauser,[d,e,f] Luca Gelisio,[g] David R. Hall,[h] Filip Leonarski,[i] Valerio Mariani,[g] Gianluca Santoni,[j] Clemens Vonrhein[k] and Graeme Winter[h]

DECTRIS detecting the future

Monitor

- *Registered tiff tag (IFD - 51192) for meta data.*
  - *including SeriesID, ImageID, ThresholdID, ThresholdEnergy, ExposureTime…*

- *Fully tiff compatible format.*

Code		Name	Type	Count	Short description
Dec	Hex				
0	0000	IfdVersion	LONG	1	Indicates the Dectris IFD version. Currently 0.
1	0001	SeriesUniqueId	ASCII	N	The unique identifier of the series. Example: *01DC3XQ8ENM14PYCDHQ9XVZZJ8*
2	0002	SeriesNumber	LONG	1	The series number (id).
3	0003	ImageNumber	LONG	1	The image number (id) in the series.
4	0004	ImageDateTime	ASCII	N	The date and time when the original image data was acquired. The format is RFC 3339. Example: *2019-05-14T10:59:56.000000000Z*
5	0005	ThresholdId	SHORT	N	The threshold identifier(s). For difference mode there are two threshold ids (N=2).
6	0006	ThresholdEnergy	DOUBLE	N	Threshold energy in eV. For difference mode, the two threshold energies used (N=2). Otherwise, the single threshold energy corresponding to the threshold id (N=1).

DECTRIS detecting the future

Tentative timeline

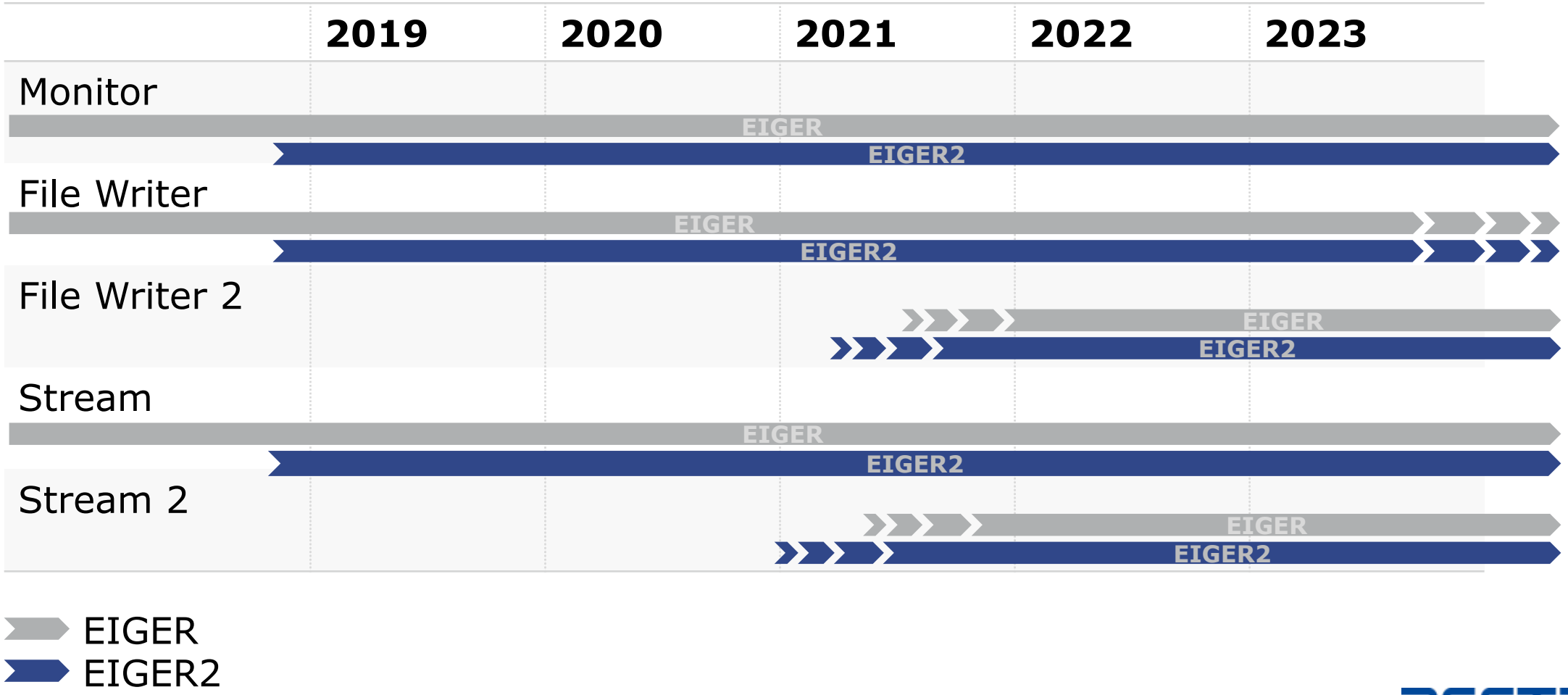

DECTRIS detecting the future

DECTRIS
detecting the future

The future is golden!

www.dectris.com

andreas.foerster@dectris.com

DECTRIS Ltd.
5405 Baden-Dättwil
Switzerland
www.dectris.com