HDRMX at SSRL

Art Lyubimov · HDRMX Meeting · 11.06.2019

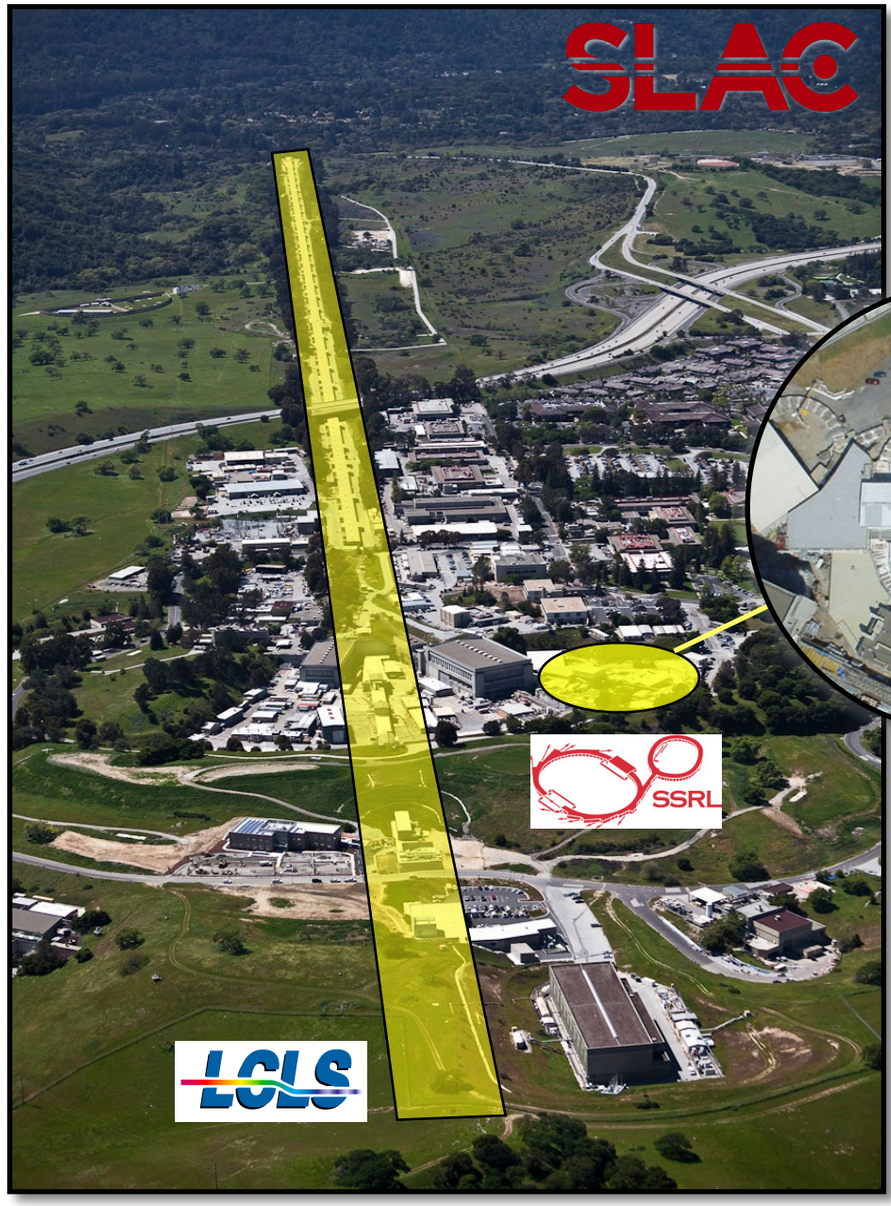
SLAC
SSRL
LCLS

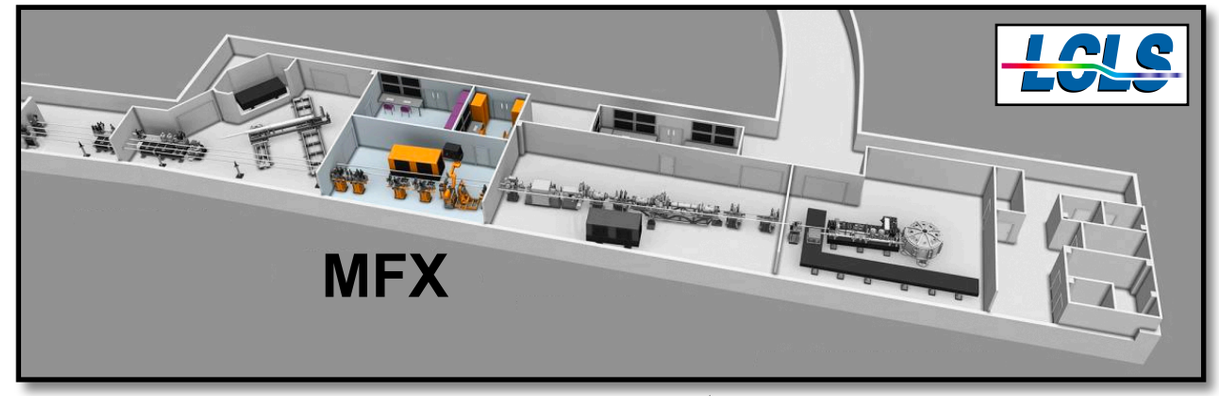
LCLS
MFX

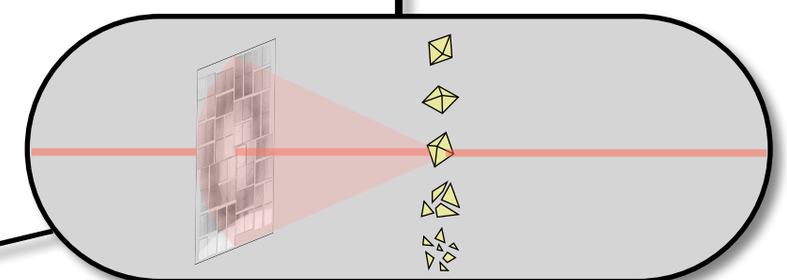

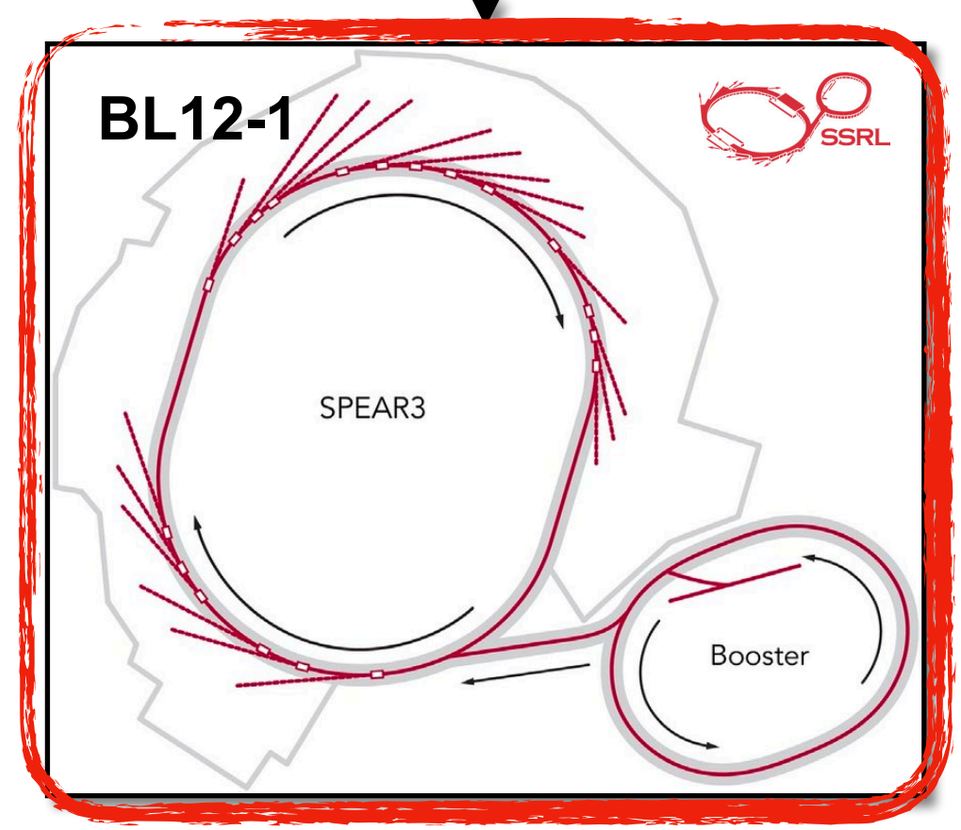
BL12-1
SSRL
SPEAR3
Booster

New Instrument: Beamline 12-1

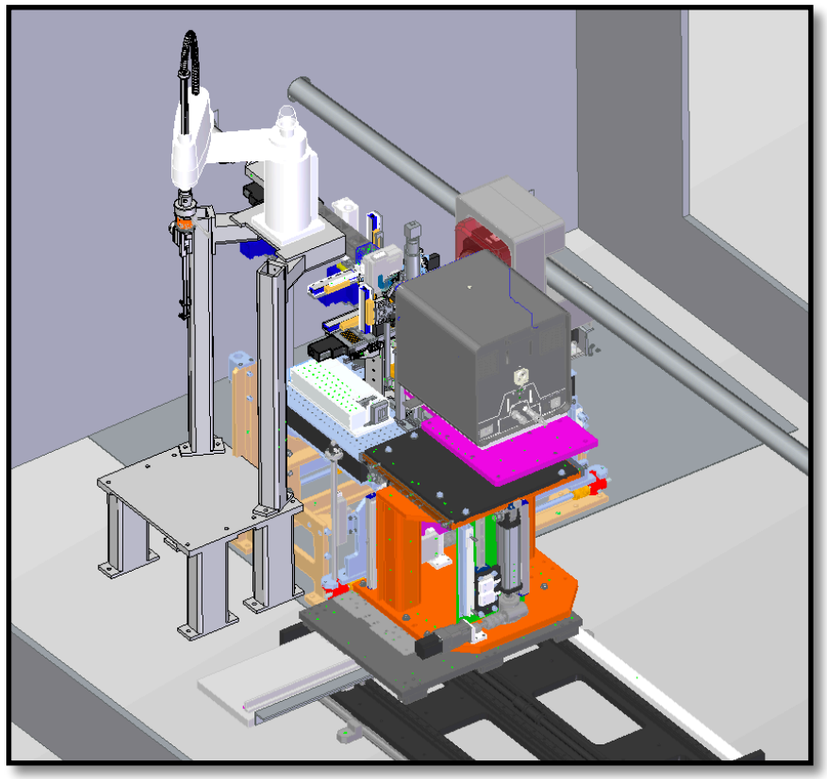

•5-15 keV range, S-SAD phasing optimized

- Intense X-ray micro-beam
  - **1 μm² to 100 μm²**
  - **$3x10^{13}$ photons/sec flux to focal plane**
  - $4x10^{12}$ photons/sec flux to 5 x 5 μm² aperture

•Mo/B4C Multilayer Monochromator Option
- **$4x10^{14}$ photons/sec flux to focal plane**
- $2.5x10^{13}$ photons/sec flux to 5 x 5 μm² aperture

Conventional *and* serial crystallography

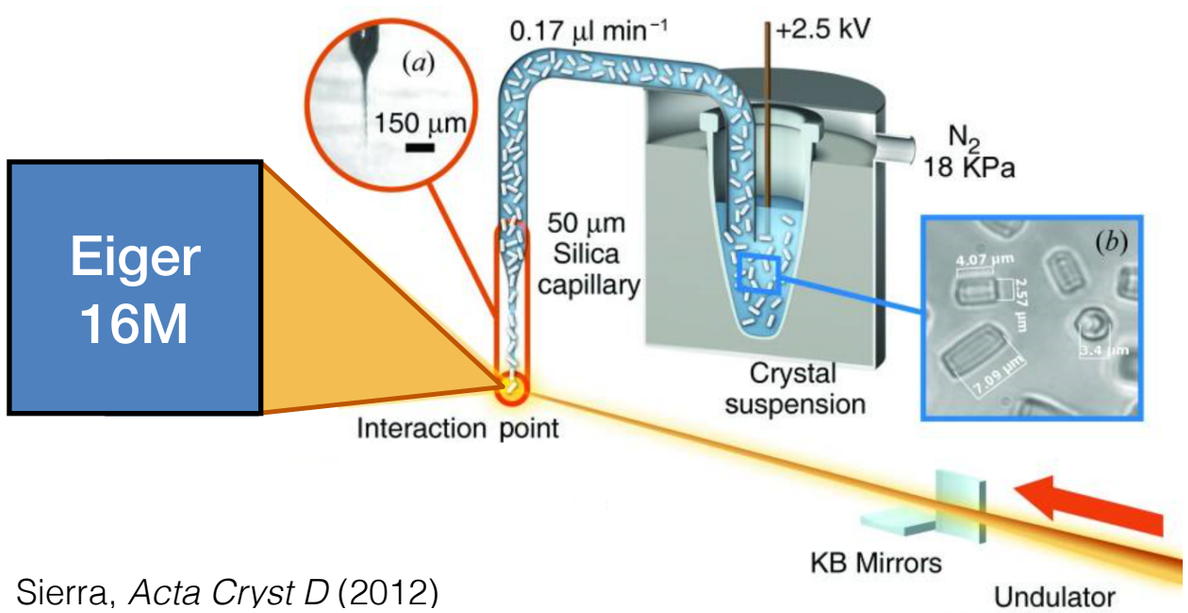

Sierra, *Acta Cryst D* (2012)

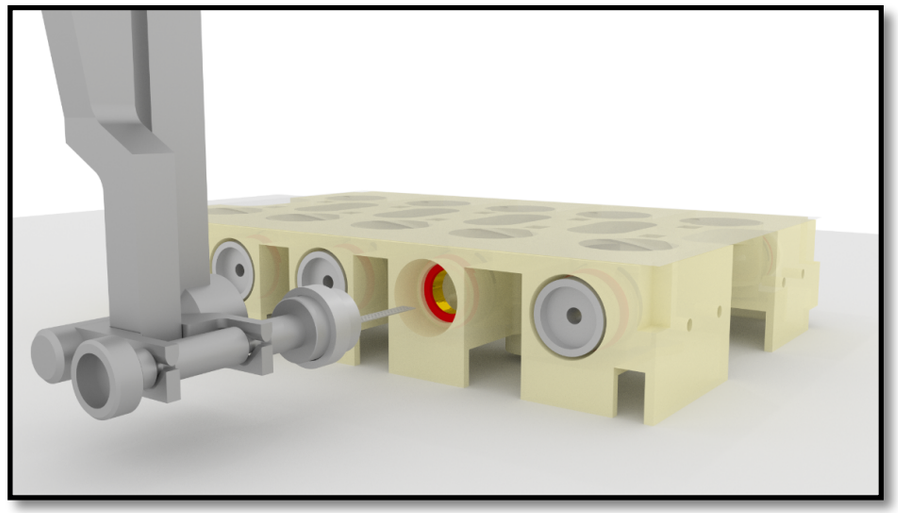

Loops, chips, *and* jets

New Instrument: Beamline 12-1

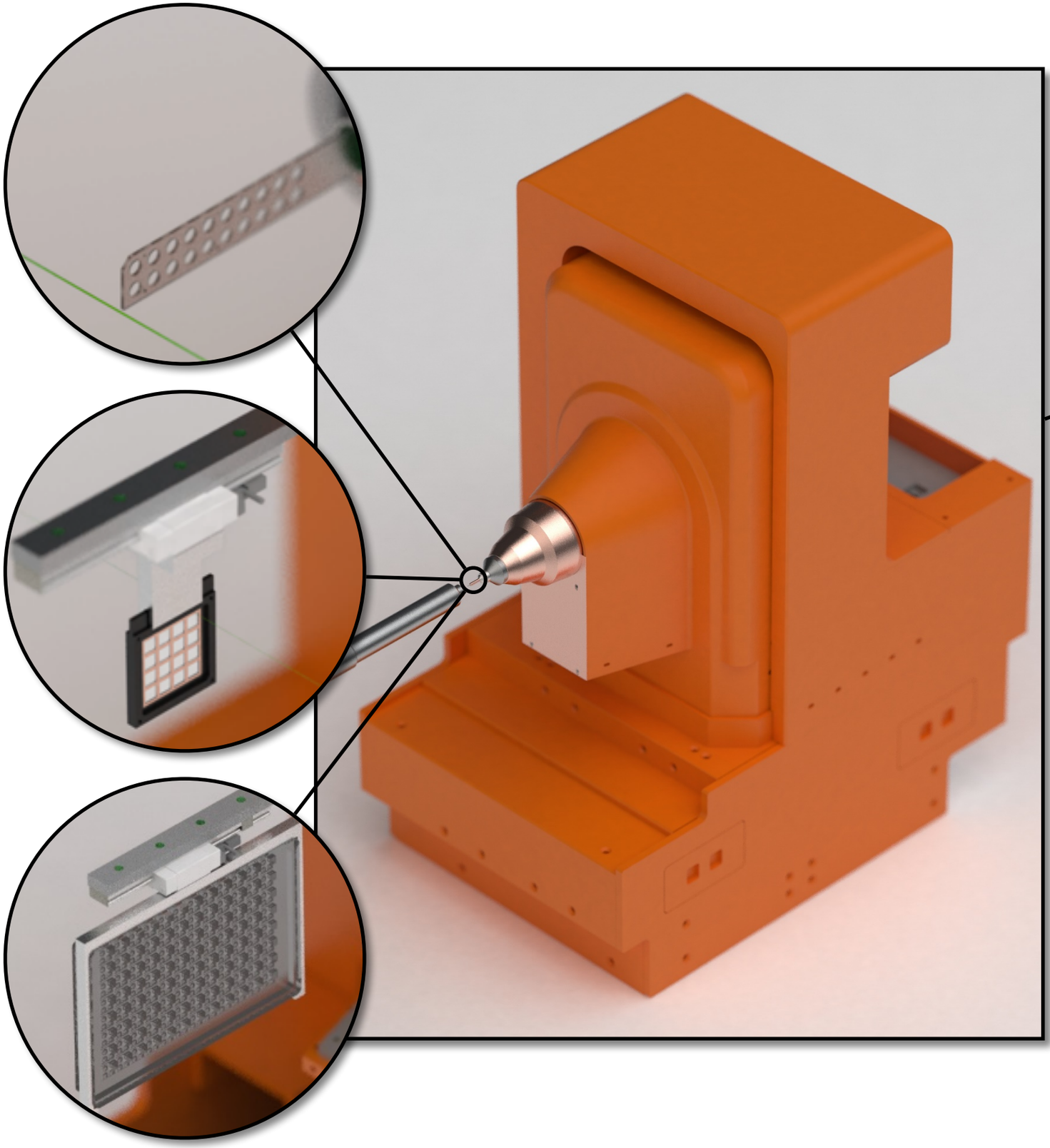

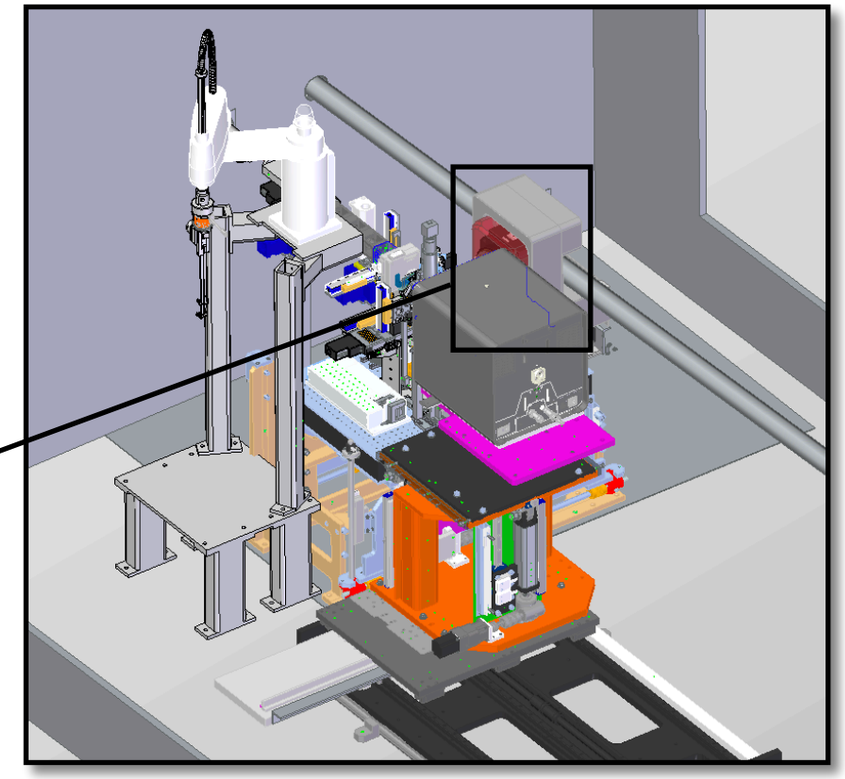

New microdiffractometer

Optimized for fixed-target SX

High-speed shutterless data collection

Alternative stage assemblies

New Instrument: Beamline 12-1

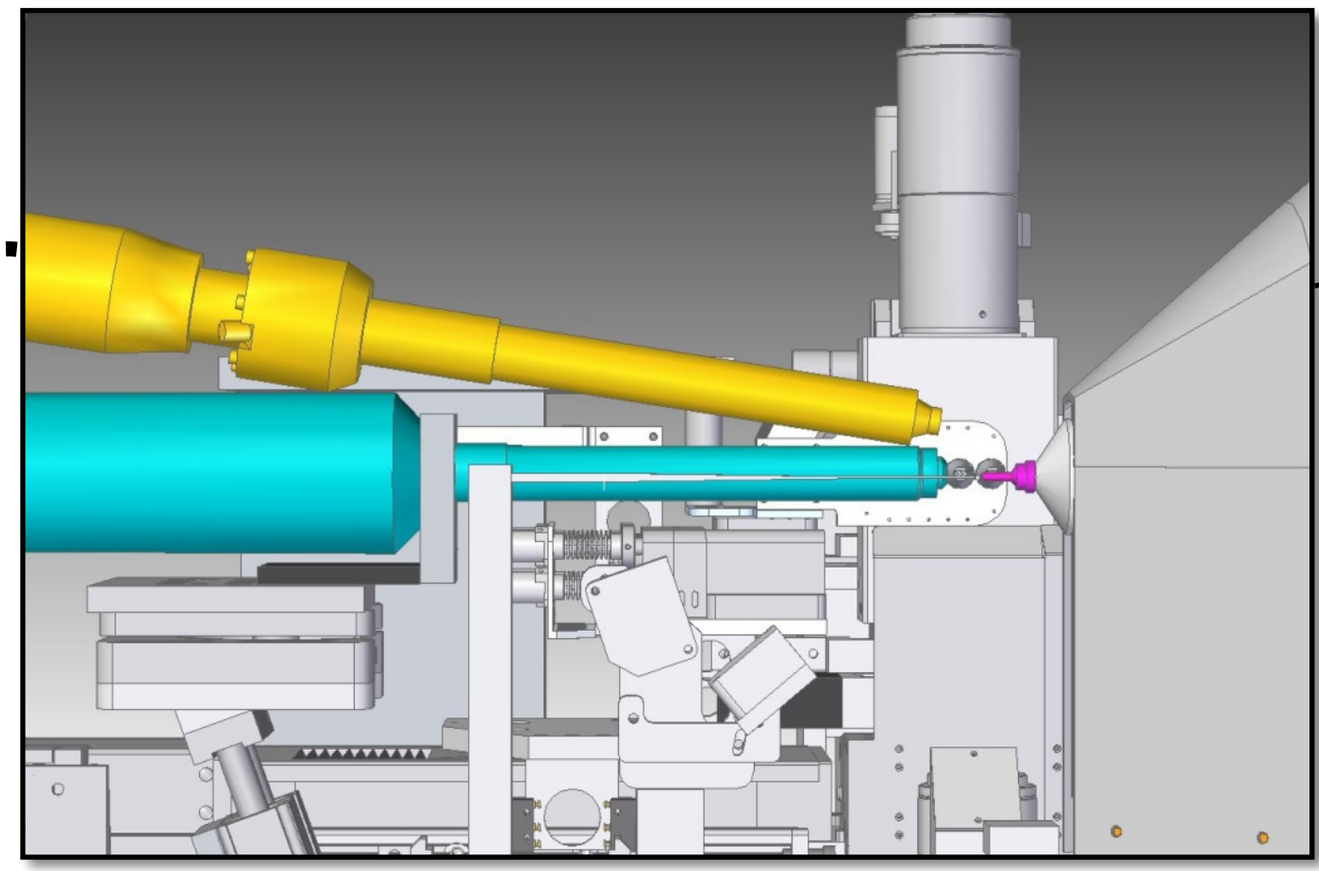

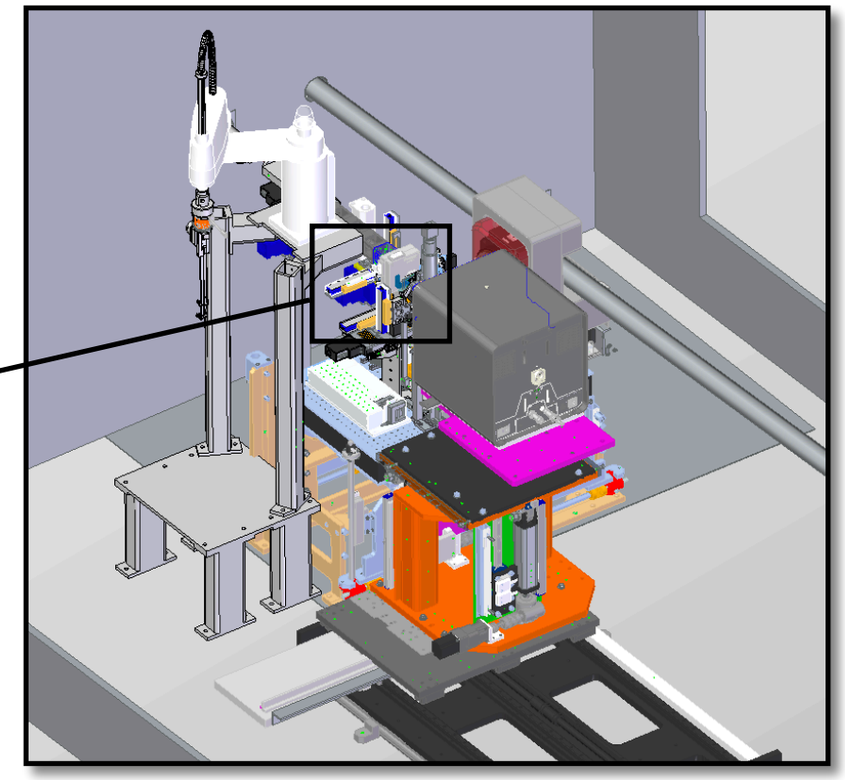

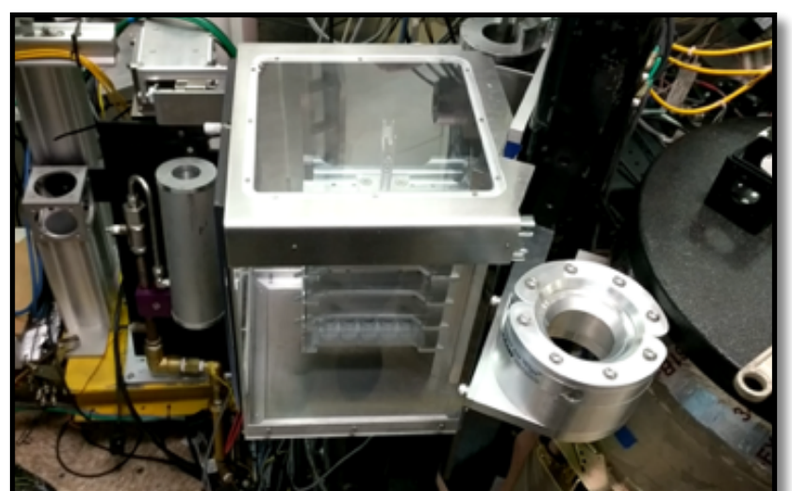

Experiments at 100K and RT

Rapid interchange between modes

Humidity controlled “warm” stream

Humidity controlled sample chamber

New Instrument: Beamline 12-1

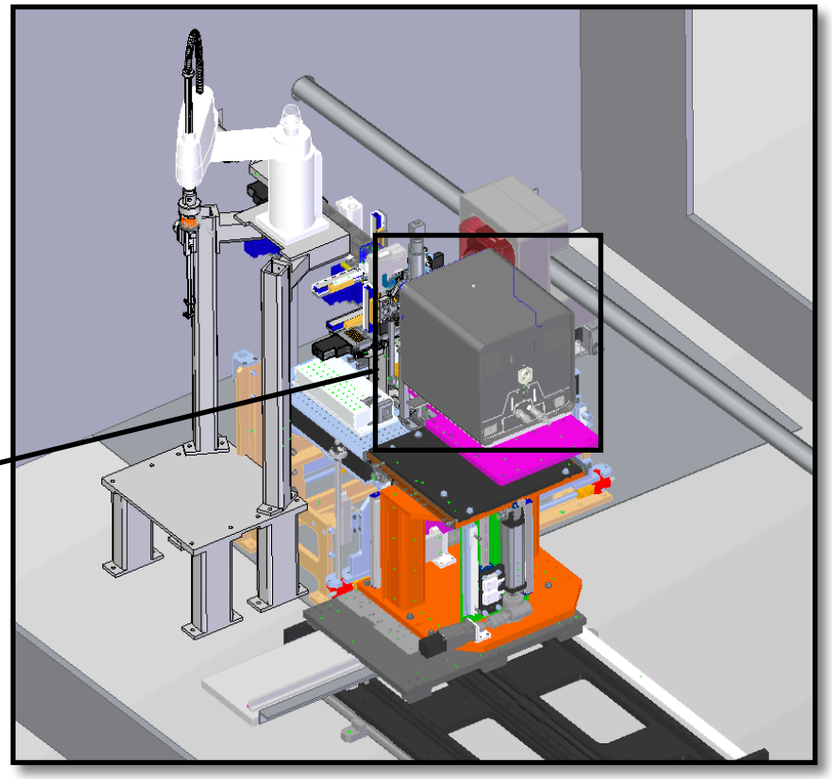

Eiger 16M Detector

133 Hz frame rate

Fixed-target and injector SX

Eiger implementation at BL12-1

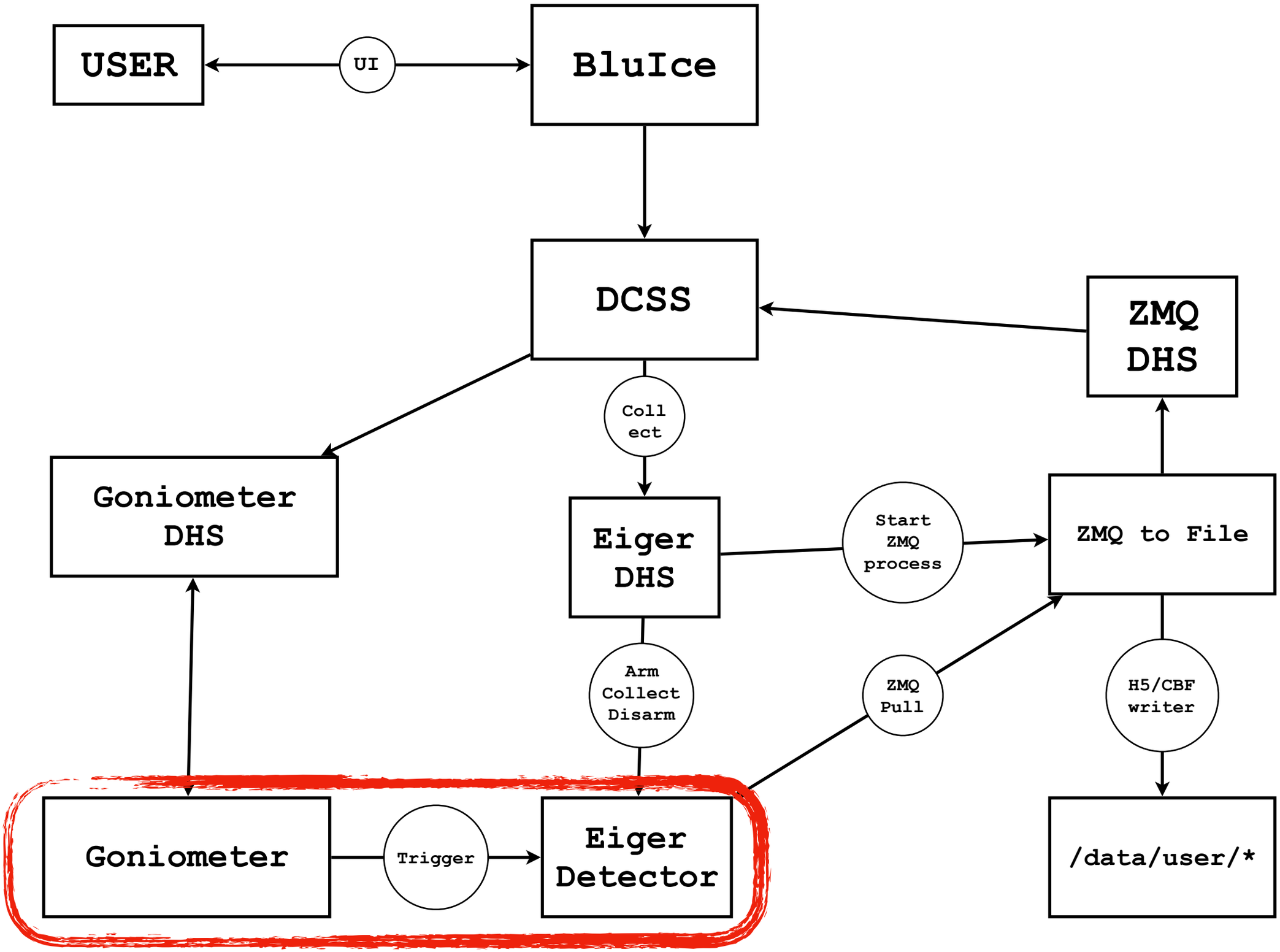

Eiger implementation at BL12-1

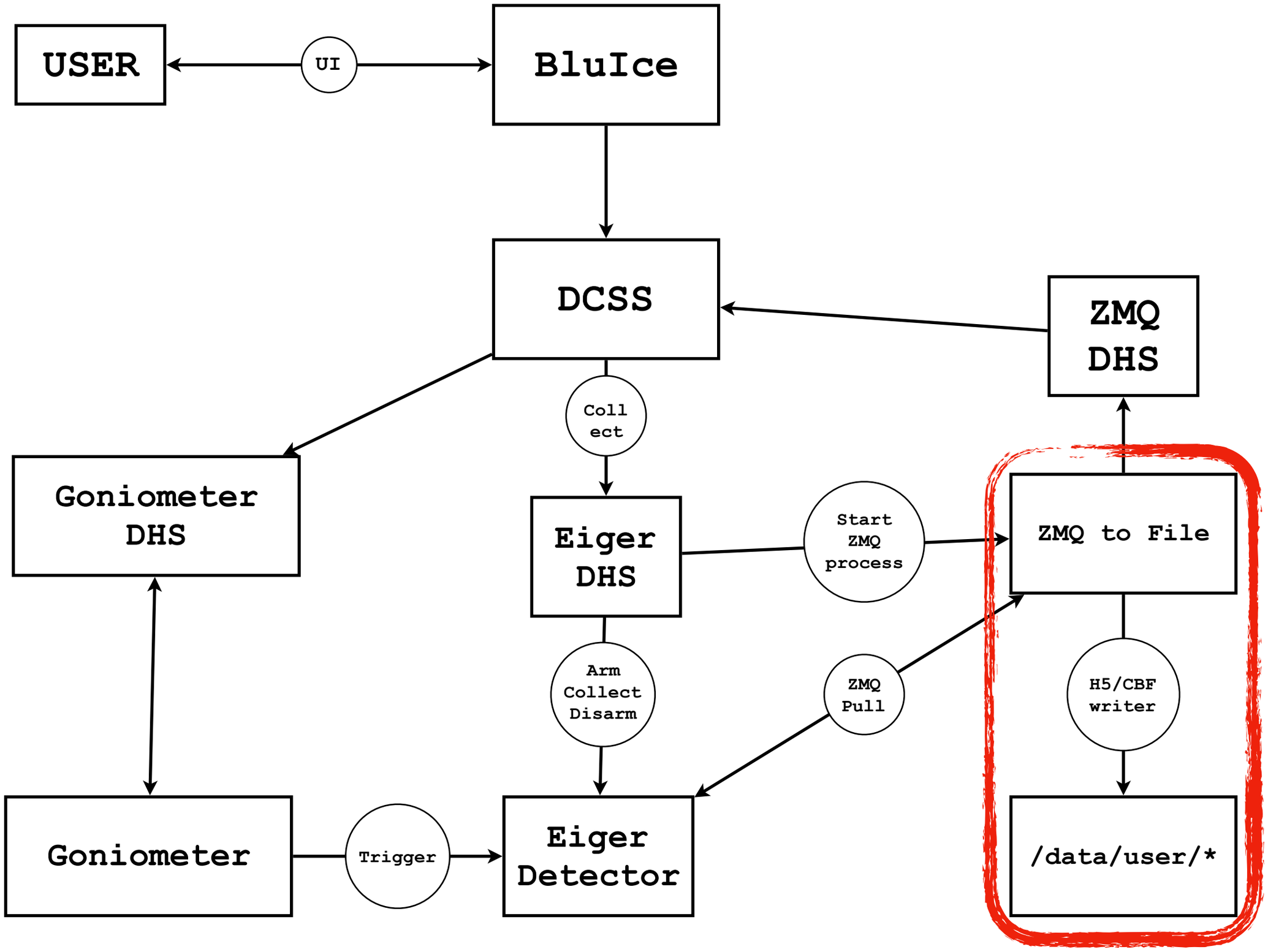

Eiger implementation at BL12-1

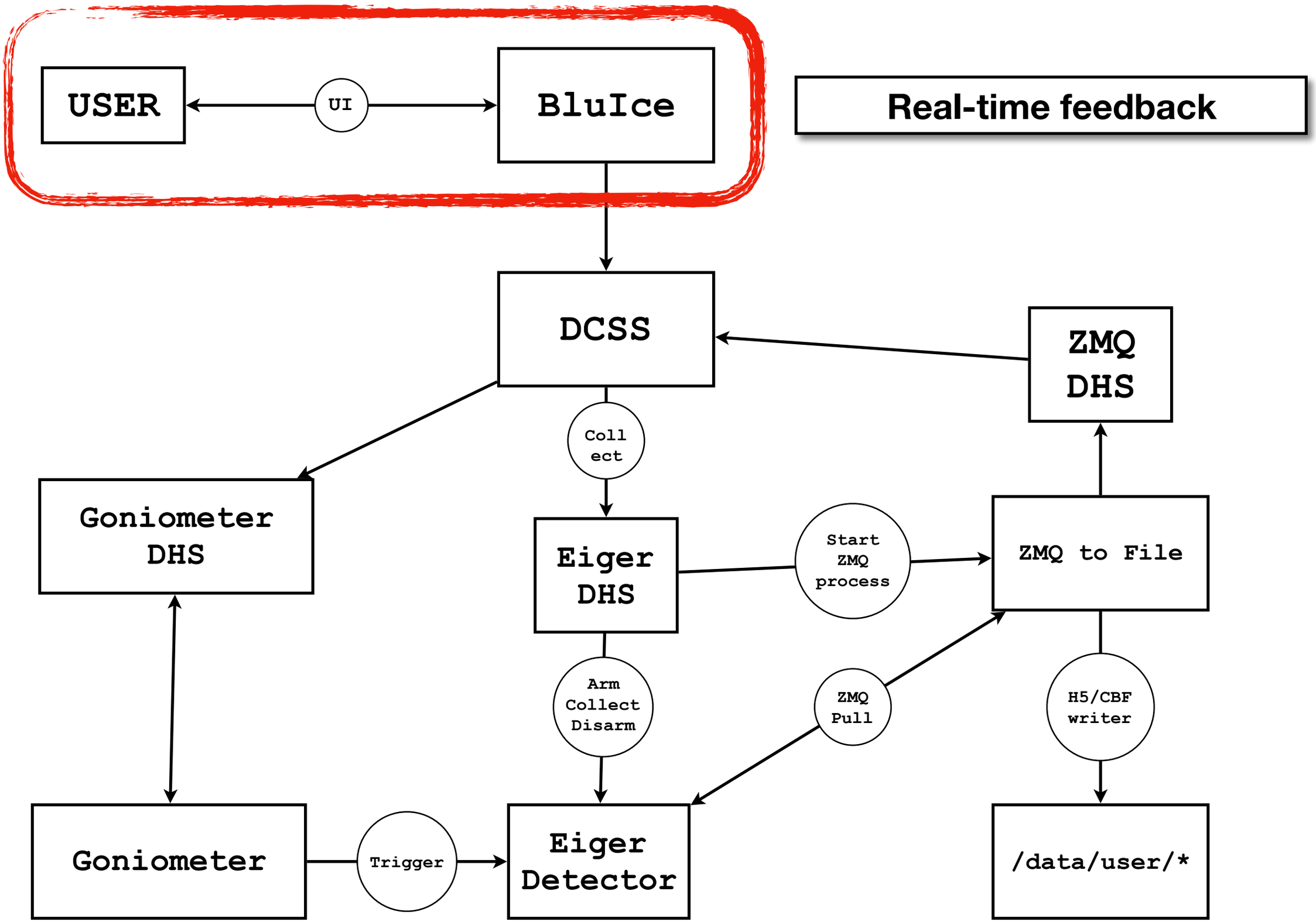

Real-time feedback in BluIce

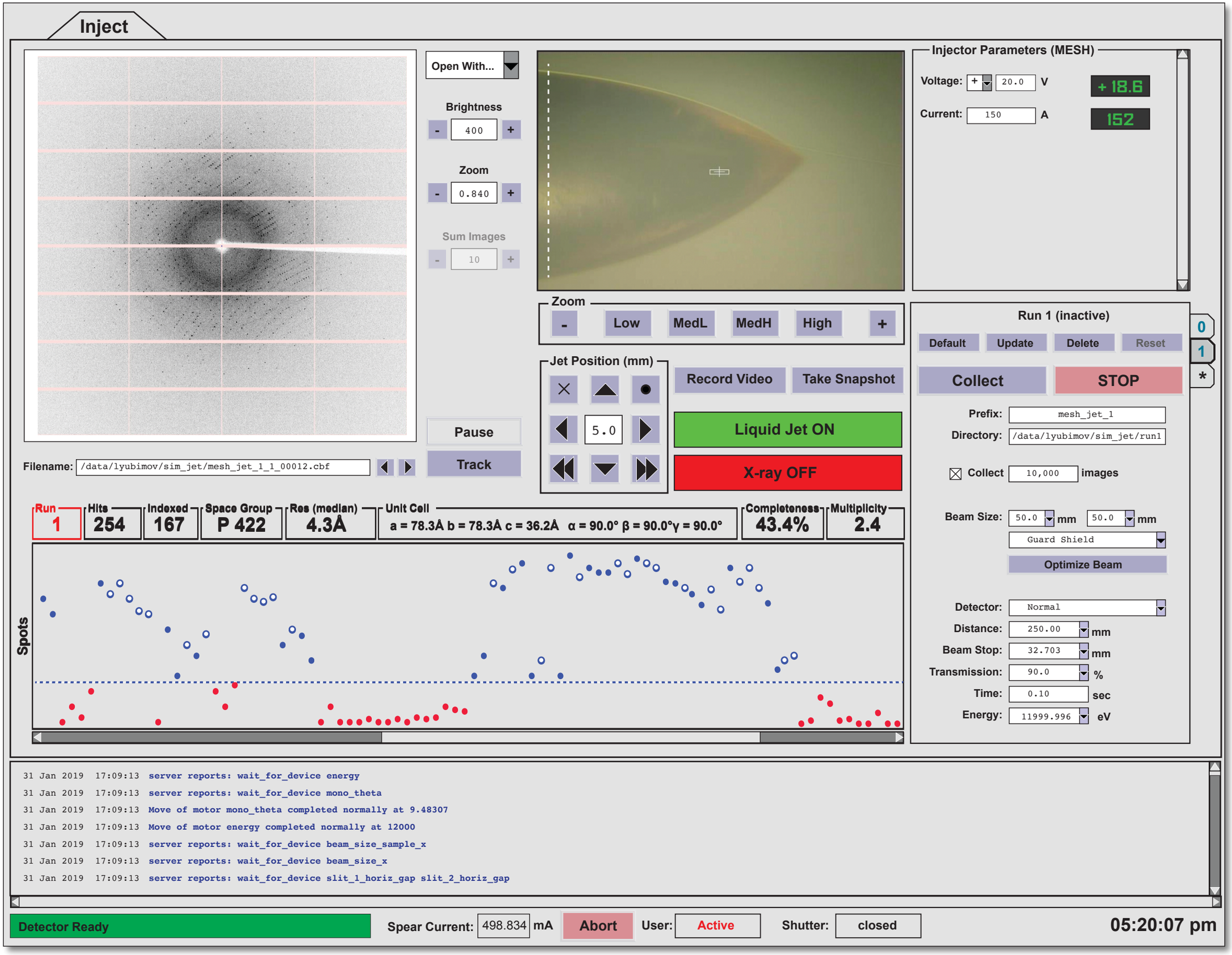

Collaboration

SSRL SMB
Aina Cohen
Mike Soltis
Jeney Wierman
Jinhu Song
Irimpan Mathews
Edger Estebanez
Scott McPhillips
Silvia Russi
Clyde Smith
Mike Hollenbeck
Paul Ehrensberger

LCLS
Monarin Uervirojnangkoorn
Ray Sierra

LBNL (DIALS West)
Nick Sauter
Aaron Brewster
Billy Poon

Diamond (DIALS East)
Graeme Winter
Nick Devenish